LEFT/RIGHT SPEAKER AMP

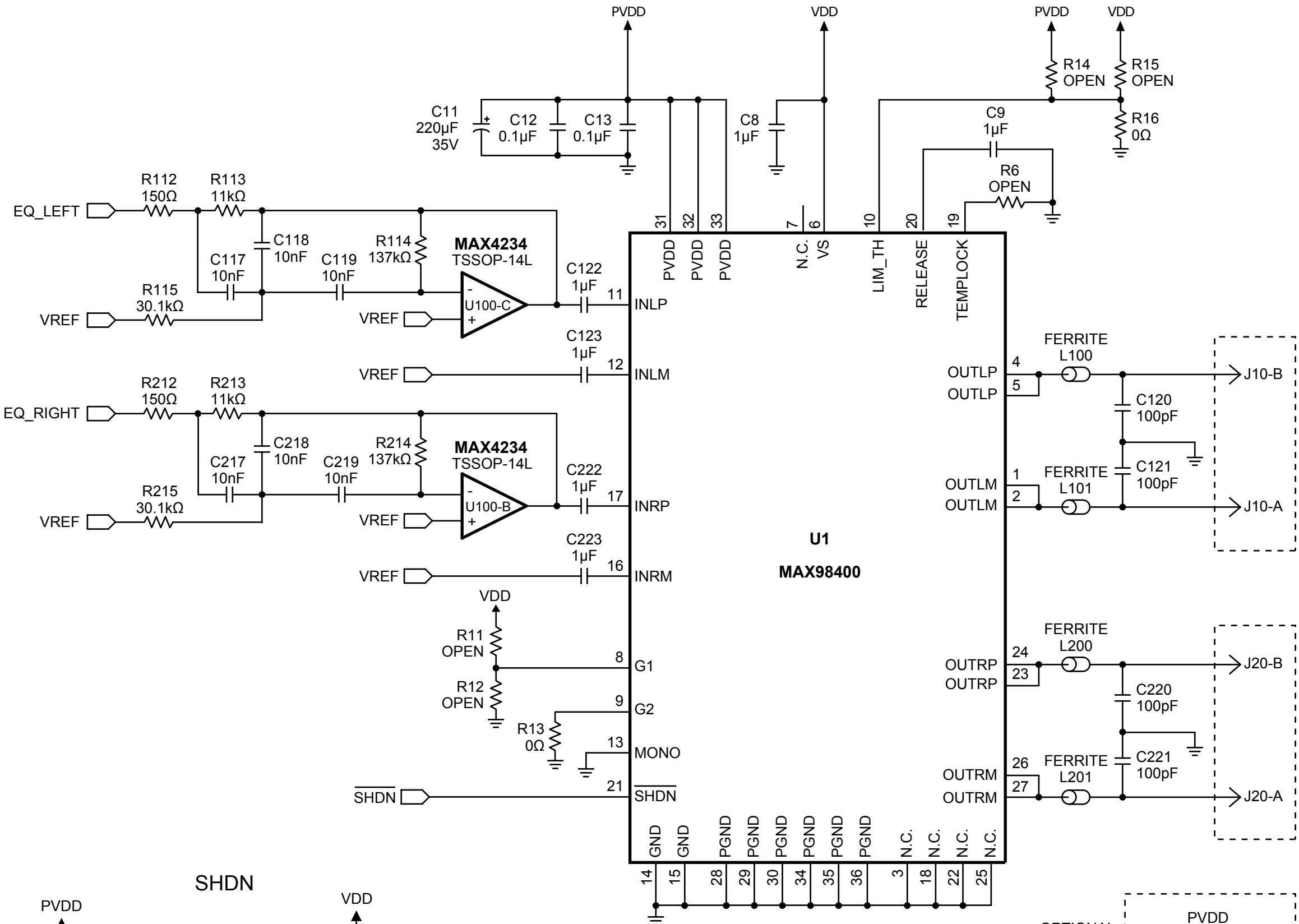
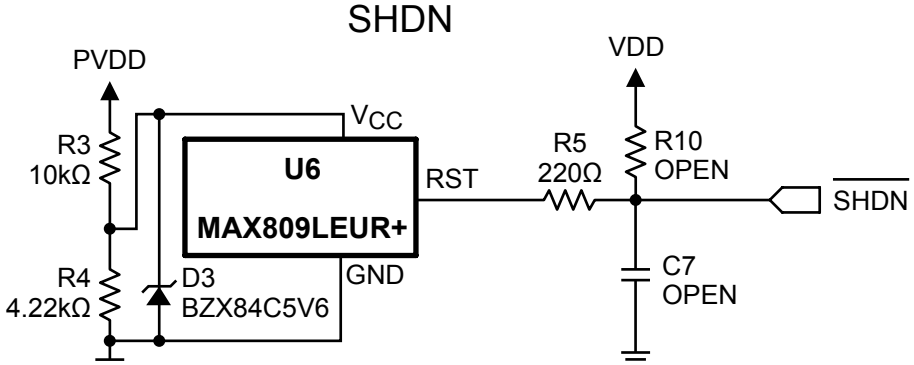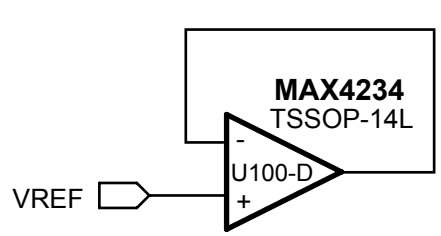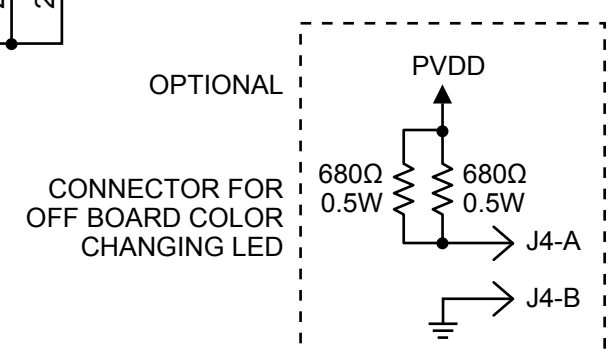
SHDN