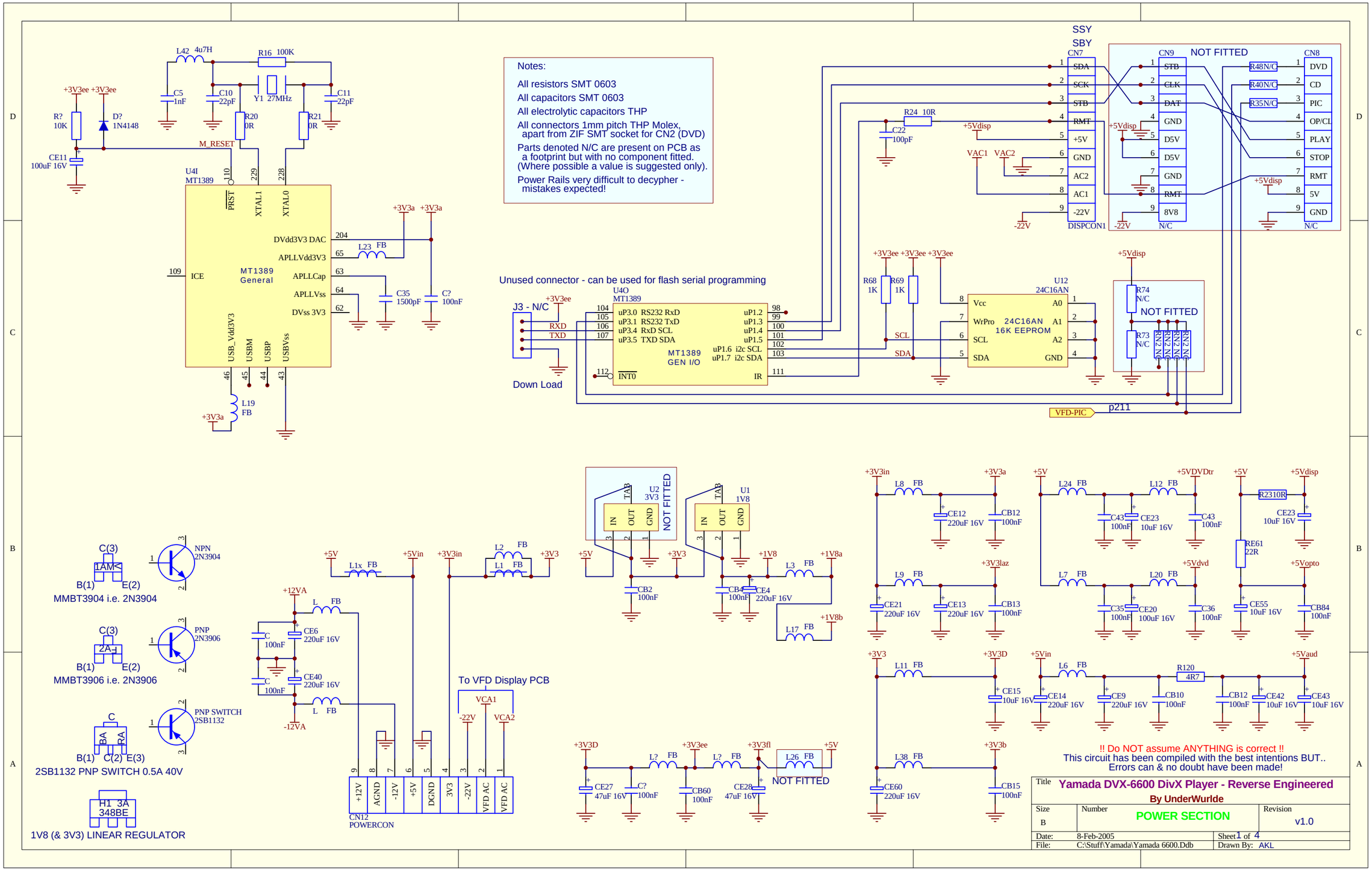
Notes:
All resistors SMT 0603
All capacitors SMT 0603
All electrolytic capacitors THP
All connectors 1mm pitch THP Molex, apart from ZIF SMT socket for CN2 (DVD)
Parts denoted N/C are present on PCB as a footprint but with no component fitted. (Where possible a value is suggested only).
Power Rails very difficult to decypher - mistakes expected!
U4I MT1389
MT1389 General
MT1389 GEN I/O
U4O MT1389
Unused connector - can be used for flash serial programming
J3 - N/C
Down Load
U12 24C16AN
24C16AN 16K EEPROM
CN7 DISPCON1
CN9 NOT FITTED
CN8
SSY
SBY
VFD-PIC
p211
U2 3V3 NOT FITTED
U1 1V8
MMBT3904 i.e. 2N3904
MMBT3906 i.e. 2N3906
2SB1132 PNP SWITCH 0.5A 40V
1V8 (& 3V3) LINEAR REGULATOR
To VFD Display PCB
CN12 POWERCON
NOT FITTED
!! Do NOT assume ANYTHING is correct !!
This circuit has been compiled with the best intentions BUT..
Errors can & no doubt have been made!
Title Yamada DVX-6600 DivX Player - Reverse Engineered
By UnderWurlde
Size B
Number POWER SECTION
Revision v1.0
Date: 8-Feb-2005
Sheet 1 of 4
File: C:\Stuff\Yamada\Yamada 6600.Ddb
Drawn By: AKL