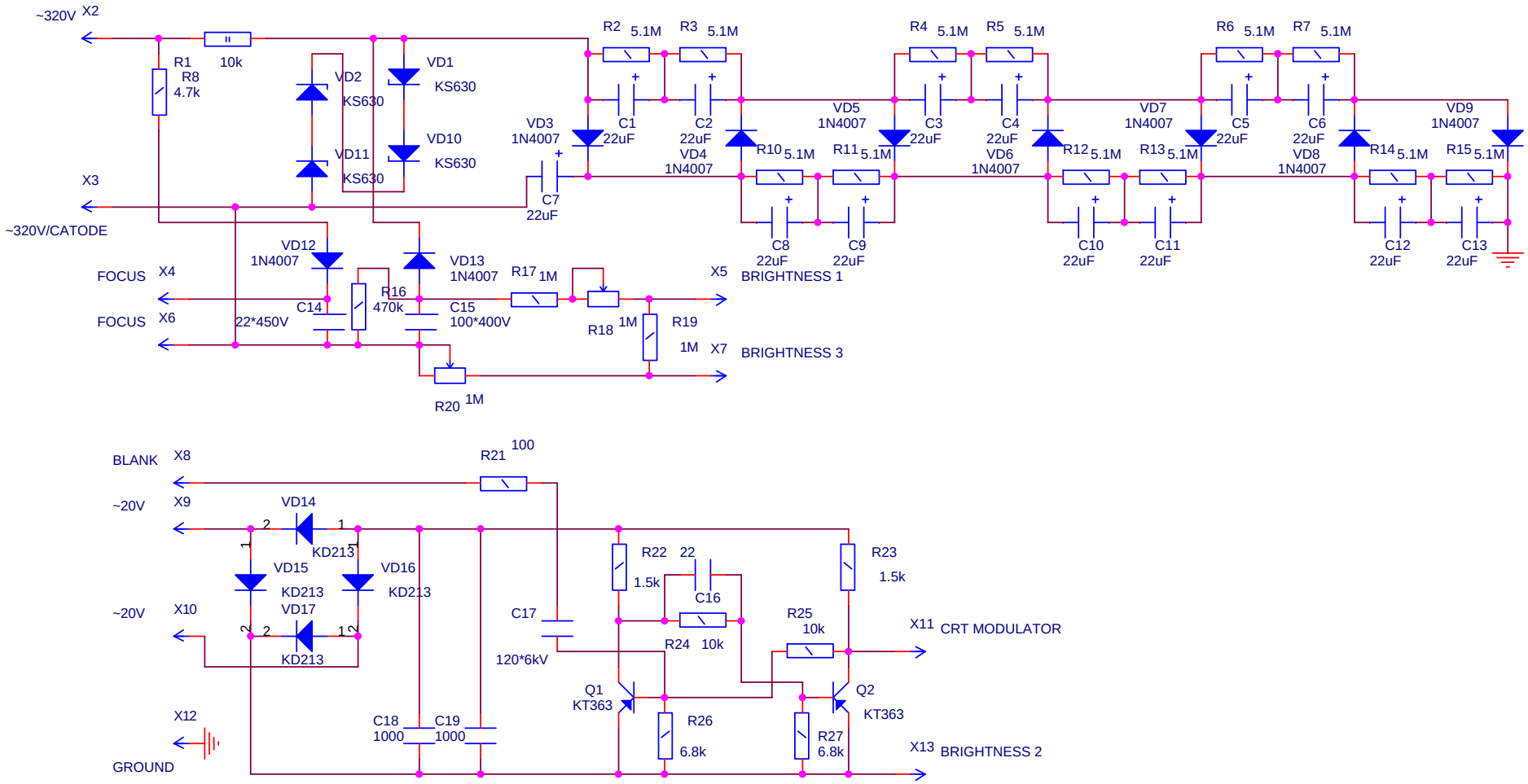

Title	Узел питания ЭЛТ	
Size A4	Document Number <Doc>	Rev <RevCode>
Date: Saturday, December 22, 2018	Sheet 1 of 8	